VALVEGYR®

Gas Valve Proving System

LDU11...

Series ...A...

ISO 9001

The LDU11... gas valve proving system is designed for use in gas-fired plant equipped with two safety shutoff valves. During each startup cycle, the control unit automatically programs the valve proving test and, in the event of a leak, prevents burner startup.

Use

The LDU11... control unit is designed to provide automatic gas valve proving (leakage test) based on the pressure proving principle. It is for use in gas-fired plant with or without vent pipe to the atmosphere. For plants without vent pipe, where DIN/DVGW regulations apply, refer to the hints given on «Connection examples with vent pipe to the atmosphere».

Gas valve proving is initiated automatically with every burner startup using one or two standard pressure monitors, either

– prior to burner startup,
– during the pre-purge time, if it lasts at least 60 s,
– immediately after the controlled shutdown, or
– on completion of the burner control's control program, e.g. on completion of the post-purge time

The valve proving test is based on the two-stage pressure proving principle: first, the valve on the mains side is tested by evacuating the test space and by monitoring the atmospheric pressure in it. Then, the valve on the burner side is checked by pressurizing the test space and by monitoring the gas pressure. If the pressure increases excessively during the first test phase (Test 1), or decreases excessively during the second test phase (Test 2), the control unit inhibits burner startup and goes to lockout. In that case, the lockout reset button lights up to indicate the fault. Remote indication of the fault is also possible. A program indicator, which stops whenever a fault occurs, indicates which of the two valves is leaking.

The LDU11... can be reset either on the unit itself or with an electric remote resetting device.

Mechanical design

The control unit is of plug-in design. Housing and plug-in base are made from impact-proof and heat-resistant plastic material.
The housing accommodates:

- The synchronous motor of the sequence switch complete with gear train and step action sequence switch
- The camshaft with 15 non-adjustable cams
- The program indicator at the head of the camshaft
- One main and one auxiliary relay
- The lockout relay which can be electrically reset from a remote location and which provides the functions «Lockout» and «Resetting»
- The unit fuse with a spare fuse

All electrical components are interconnected via printed circuits.

The plug-in base carries the following terminals:

- 24 connection terminals
- 2 auxiliary terminals (nos. «31» and «32»)
- 3 earth terminals
- 3 neutral terminals (prewired to terminal 2, the neutral input)

The following knockout holes are available for the cable entry:

- 14 knockout holes for the cable entry by means of cable glands, 8 at the side and 6 at the bottom of the base
- 6 threaded knockout holes at the side for cable entry glands Pg11

Plug-in base and terminals are designed such that the erroneous plugging in of a unit with the same housing, which is not suited for use with the relevant burner, is made impossible.

Visible in the transparent lockout reset button, the program indicator informs service staff about the programming sequence, the type of fault and the point in time the fault occurred, using easy-to-remember symbols.

Ordering

Control unit for gas valve proving, without base

– For AC 220-240 V, 50-60 Hz	**LDU11.523A27**
– For AC 100-110 V, 50-60 Hz	**LDU11.523A17**
Plug-in base	**AGM11**

Technical data

Mains voltage	AC 220 V -15 %...240 V +10 % AC 100 V -15 %...110 V +10 %
Mains frequency	50 Hz -6 %...60 Hz +6 %
Power consumption	
- during the test	3.5 VA
- during burner operation	2.5 VA
Prefuse (externally)	T16/500 V
Unit fuse	T6,3H250 V to IEC 127
Radio interference protection	N to VDE 0875
Perm. input current at terminal 1	5 A continuous to VDE 0660 AC3
Perm. current rating of control terminals	4 A to VDE 0660 AC3
Required switching capacity of pressure switch «DW»	1 A min., AC 250 V
Mounting position	optional
Degree of protection	IP40
Weight	
– control unit approx.	1000 g
– base approx.	165 g

Environmental conditions:	
- Transport	IEC721-3-2
Climatic conditions	class 2K2
Temperature	-50...+60 °C
Humidity	< 95 % r.h.
Mechanical conditions	class 2M2
- Operation	IEC721-3-3
Climatic conditions	class 3K5
Temperature	-20...+60 °C
Humidity	< 95 % r.h.

Condensation, formation of ice and influence of water are not permitted.

CE conformity	
According to the directives of the European Community	
Electromagnetic compatibility EMC	89/336 EWG include. 92/31 EEC
Gas appliance directive	90/396 EEC
Emissions	EN 50081-1
Immunity	EN 50082-2

Mode of operation

To carry out the first phase of the valve proving test, called «Test 1», there must be atmospheric pressure in the length of pipe between the two valves to be tested. In plants with a vent to the atmosphere, this pressure is available if the valve proving test is conducted prior to or during the pre-purge time. In plants without a vent pipe, atmospheric pressure is made available as the control unit opens the valve on the burner side during the time «t4». If the valve proving test is performed after the operation of the burner, the valve on the burner side after the controlled shutdown can be kept open until «t4» has elapsed, thus reducing the pressure in the test space and making certain its gas content is burnt off in the combustion chamber during the post-purge time. A prerequisite for this procedure is an appropriate control program of the burner control as provided by Landis & Staefa burner controls type LFE..., LFL..., LGK.... or LEC....

The test space is closed off after it has been evacuated. During the first test phase (Test 1) which follows immediately, the control unit checks if the atmospheric pressure in the test space is maintained using the pressure monitor. If the valve on the mains side is leaking, causing the pressure to rise above the switching point of the pressure monitor, the control unit initiates an alarm and goes to lockout. The program indicator then stops and indicates «Test 1».

If the pressure does not increase because the valve closes correctly, the control unit immediately programs the second test phase (Test 2). To do this, the valve on the mains side is pressurized («filling» of test space). During the second test phase, the pressure may not fall below the switching point of the pressure monitor due to a leak of the valve on the burner side. If it does, the control unit goes to lockout again, thus inhibiting burner startup.

On the successful completion of the second test phase, the control unit closes the internal control loop between terminals 3 and 6 (circuit path: terminal 3 - contact «ar 2» - terminals 4 and 5 - contact III - terminal 6). This control loop is usually included in the start control loop of the burner control.

After the control loop has been closed, the programming mechanism of the control unit returns to its start position where it switches itself off. During these «idle steps», the position of the control contacts of the programming mechanism remains unchanged.

Program and lockout indicator

When the unit goes to lockout, the programming mechanism stops and also the position indicator fitted to the spindle of the mechanism. The symbol that stops above the reading mark not only indicates during which test phase lockout occurred, but also after how many programming steps within the test phase (1 step = 2.5 seconds).

Meaning of symbols:

Start position = **operating** position

In plants without a vent valve: **evacuation** of test space through opening of the valve on the burner side

Test 1 **«Test 1»** with atmospheric pressure (valve proving test on the mains side)

Filling the test space through opening of the valve on the mains side

Test 2 **«Test 2»** with gas pressure (valve proving test on the burner side)

Idle steps until programming mechanism switches itself off

Operating position = start position for the next valve proving test

In the event of lockout, all terminals receiving voltage from the control unit are de-energized, except terminal 13, which is used for lockout indication.

After the unit has been reset, the programming mechanism automatically returns to its start position and immediately reprograms a new valve proving test.

Note: do not press the reset button for more than 10 seconds.

Control program after a power failure

A power failure prior to evacuating the test space does not cause the program sequence to change.

If a power failure occurs after the evacuation, the valve proving test will not be continued when power is restored, but the programming mechanism first returns to its start position to reprogram the complete proving test.

Calculation of leakage rate escaping from a length of pipe

$$Q_{Leck} = \frac{(P_G - P_W) \times V \times 3600}{P_{atm} \times t_{Test}}$$

where:

Q_{Leck}	in dm3/h	Permissible leakage rate in dm^3 or liters per hour
P_G	in mbar	**Overpressure** in pipe section between the valves to be tested, at the beginning of the test phase
P_W	in mbar	Overpressure set at pressure monitor DW (usually set to 50 % of the gas mains pressure)
P_{atm}	in mbar	**Absolute pressure** (1013 mbar normal pressure)
V	in dm3	Volume of test space confined by the valves to be tested, including the space in the valves themselves
t_{Test}	in s	Duration of proving time

Example

P_G	= 30 mbar	$Q_{Leck} = \frac{(30-15) \cdot 10.36 \cdot 3600}{1013 \cdot 27.5} = 20\ l/h$
P_W	= 15 mbar	
P_{atm}	= 1013 mbar	Any valve leakage rate exceeding 20 l/h causes the control unit to go to lockout
V	= 10.36 dm3	Any valve leakage rate exceeding 20 l/h causes the control unit to go to lockout
t_{Test}	= 27.5 s	

Note: the volume of pipe section V between the gas valves to be checked and overpressure Pw set on pressure monitor «DW» must be selected such that the maximum permissible gas leakage rate Q_{Leck} will not exceed the rate specified in the local regulations.

Control program

t4	5 s	Evacuation of test space
t6	7.5 s	Interval from start to energizing of main relay «AR»
t1	22.5 s	First test phase with atmospheric pressure
t3	5 s	Filling the test space
t2	27.5 s	Second test phase with gas pressure
t5	67.5 s	Total duration of valve proving test to the enabling of the burner
t20	22.5 s	Running time of programming mechanism until it switches itself off in the operating = start position («idle steps»)

Connection diagram

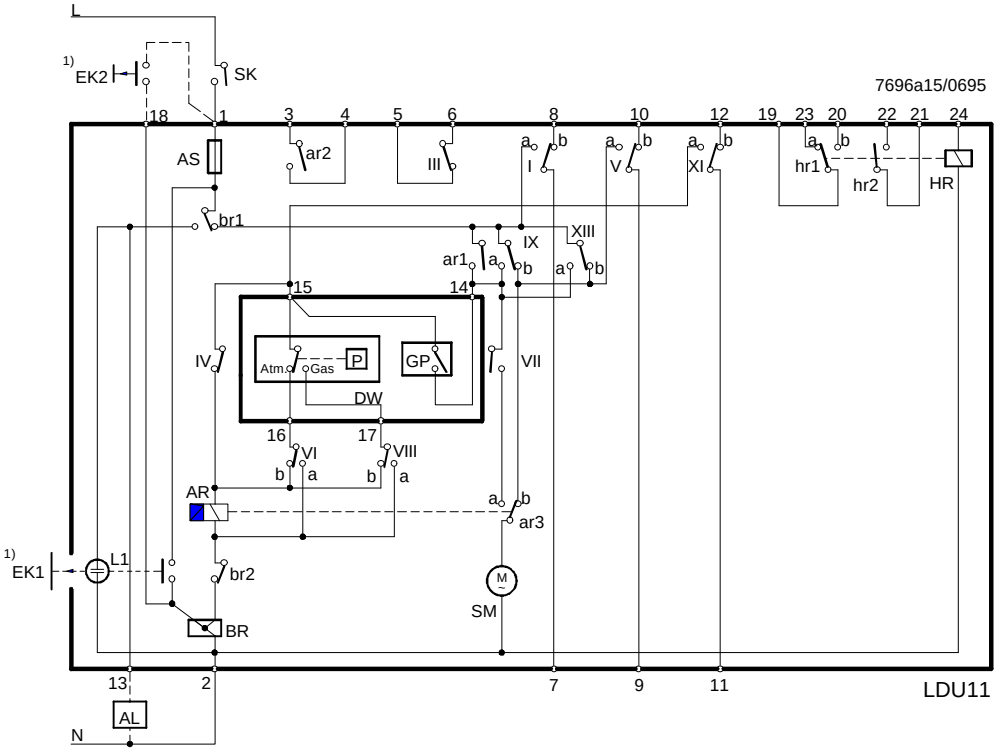

Legend

for the entire data sheet

A, A1, A2	Gas valves controlled to empty the test space
AL	Alarm signal «Leaking valve»
AR	Main relay with contacts «ar...»
AS	Built-in fuse
B	Gas valve controlled to fill the test space
BR	Lockout relay with contacts «br...»
C	Vent valve, normally open; closed during valve proving test from the beginning of «Test 1»
DW	Pressure monitor for valve proving test (does not replace the gas pressure monitor used to signal lack of gas)
E	Safety shutoff valve, normally closed; **optional**
EK...	Lockout reset button
EK2	Remote lockout reset button
GP	Gas pressure monitor (for lack of gas)
HR	Auxiliary relay with contacts «hr...»
L1	Built-in lockout warning lamp
LDU	Control unit
LP	Air pressure monitor
M...	Fan (M2: pre- and post-purge)
R	Control thermostat or pressurestat, e.g. boiler control thermostat
RB	Pipe orifice, its diameter must be determined such that in the event of a leaking pilot gas valve «A», the pilot flame cannot afterburn on completion of the 2nd safety time so that the presence of the main flame cannot be simulated
SK	Control contact (initiation of valve proving test)
SM	Synchronous motor of programming mechanism
T	Delay off time relay: the time should be set to approx. t16 (t7 min. ...t10 max.) of the burner control
W	Limit thermostat or pressure monitor
1)	**Do not press EK for more than 10 seconds**
2)	Expanding flame or interrupted pilot burner operation

Sequence diagram

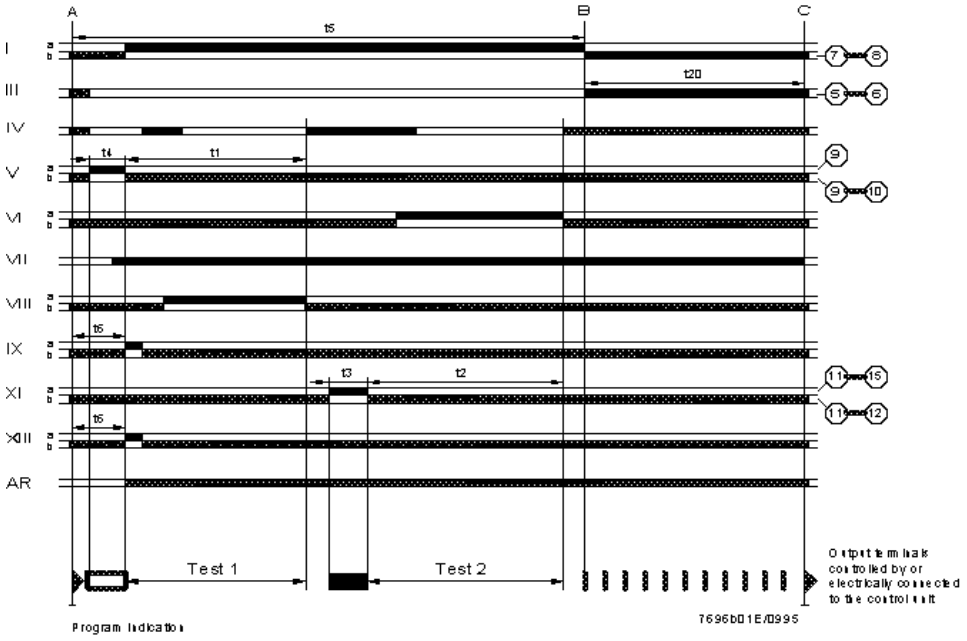

Warning notes

- **The electrical wiring must comply with local and country-specific standards and regulations!**
- **The LDU11... must be completely isolated from the mains before performing any work on it!**
- **The LDU11... is a safety device. It is therefore not permitted to open, interfere with or modify the unit!**
- **Check wiring carefully before putting the unit into operation!**
- **Check all safety functions when putting the unit into operation or after replacing a fuse!**
- **Ensure protection against electric shock hazard on the unit and at all electrical connections through appropriate mounting!**
- **Electromagnetic emissions must be checked from an application point of view!**
- **The regulations and standards covering the specific application must be observed!**
- **All installation and commissioning work must be carried out by qualified personnel!**
- **In the geographical areas where DIN standards are in use, the installation must be in compliance with VDE requirement, particularly with the standards DIN/VDE 0100 and 0722!**
- **Condensation and ingress of humidity must be avoided!**
- **Ignition cable must always be laid separately, observing the greatest possible distance to other cables!**

Connection examples with vent pipe to the atmosphere using burner control LFI7...

For other connections, refer to the wiring diagram of the burner control.

Proving test **prior to burner startup**

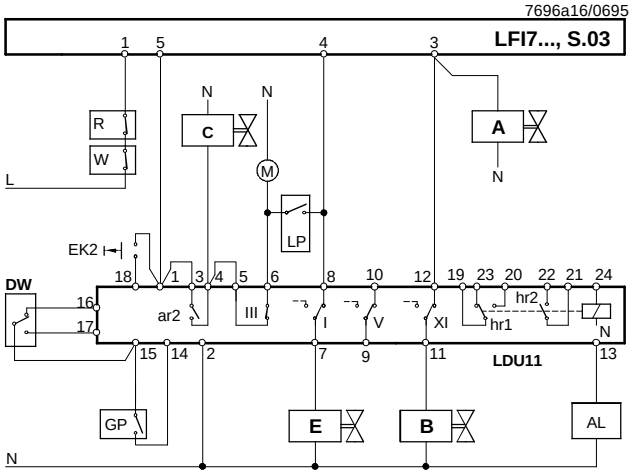

Proving test **following immediately the controlled shutdown**

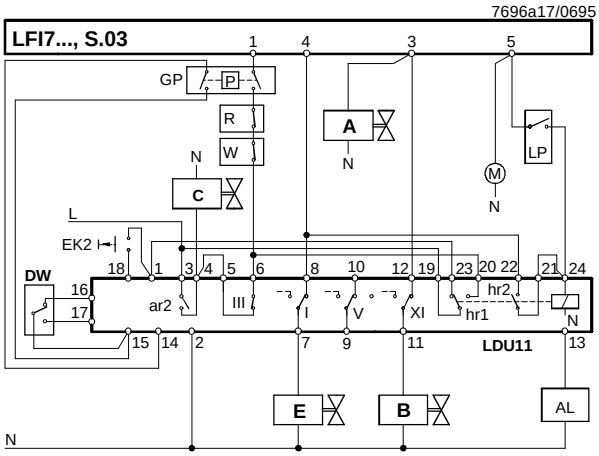

Connection examples with vent pipe to the atmosphere using burner control LFM1...

For other connections, refer to the wiring diagram of the burner control.

Proving test **prior to burner startup**

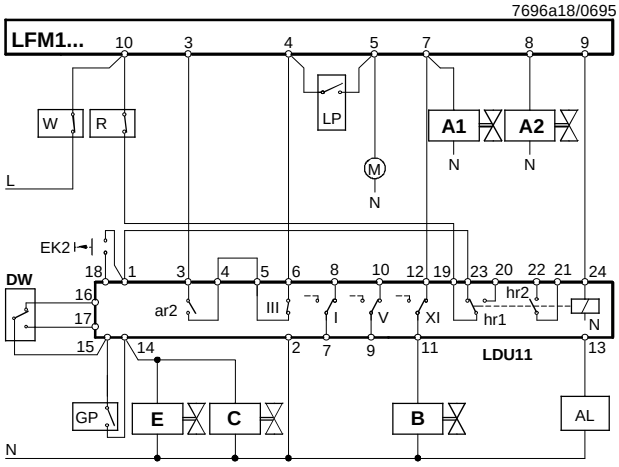

Proving test **following immediately the controlled shutdown**

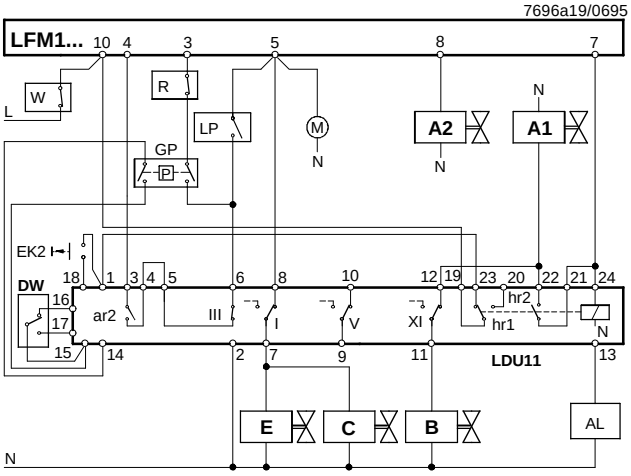

Connection examples with vent pipe to the atmosphere using burner control LGB2.../3.../4...

For other connections, refer to the wiring diagram of the burner control.

Proving test **prior to burner startup**

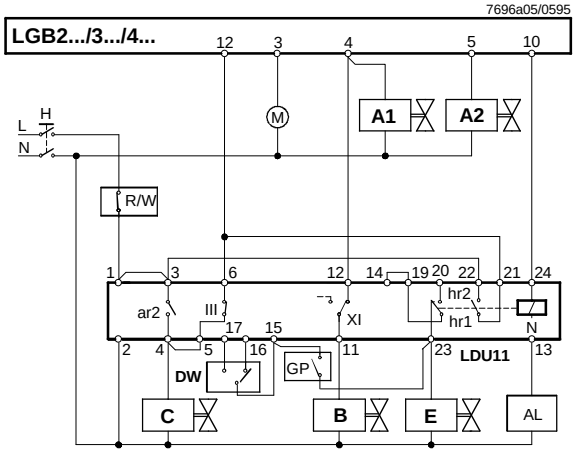

Proving test **following immediately the controlled shutdown**

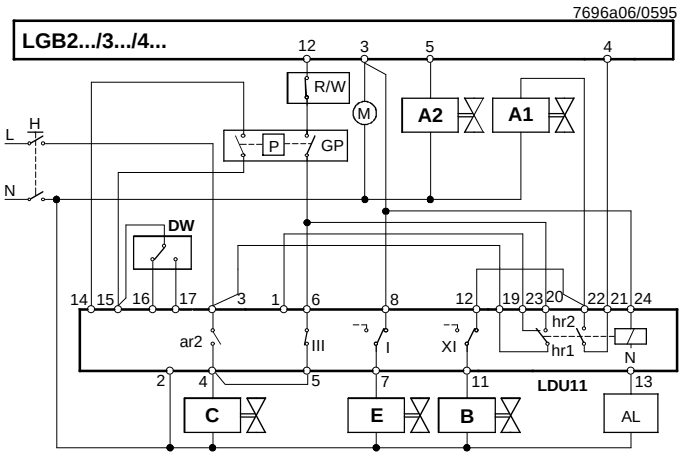

Installations **with** vent pipe to the atmosphere

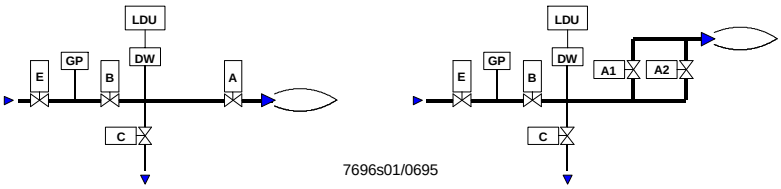

Connection examples with vent pipe to the atmosphere using burner control LFE, LFL, LGK or programming unit LEC...

For other connections, refer to the wiring diagram of the burner control.

Proving test **prior to burner startup**

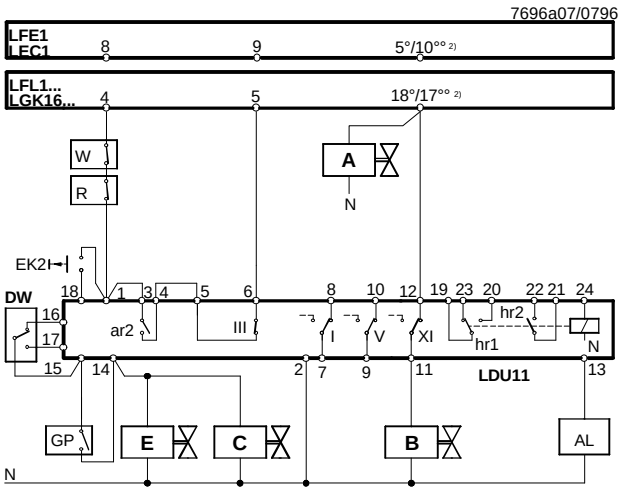

Proving test **during pre-purge time (60 s min.)**

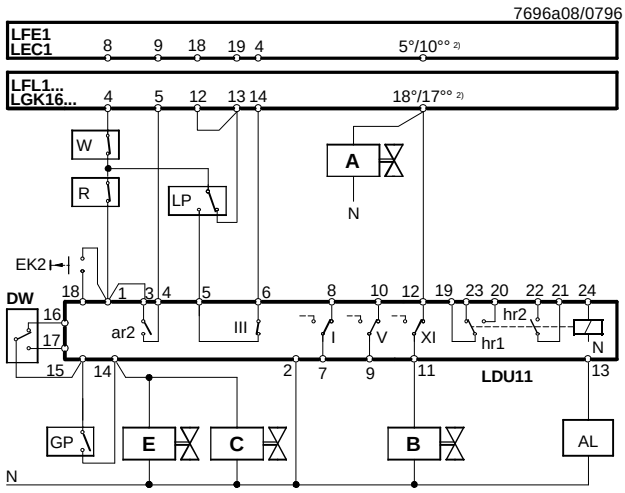

Valve proving with two pressure monitors

DWG Pressure monitor for the gas valve proving test with gas pressure. This pressure monitors must be set to the minimum gas pressure permitted during the proving test. If this pressure is not reached during the test, the control unit goes to lockout.

DWA Pressure monitor for the gas valve proving test with atmopheric pressure. This pressure monitor must be set to the maximum gas pressure permitted during the proving test with atmospheric pressure. If this pressure is exceeded during the test, the control unit goes to lockout.

DWG and DWA must be **overload-proof** up to the gas pressure level.

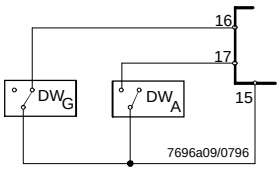

Installations **with** vent pipe to the atmosphere

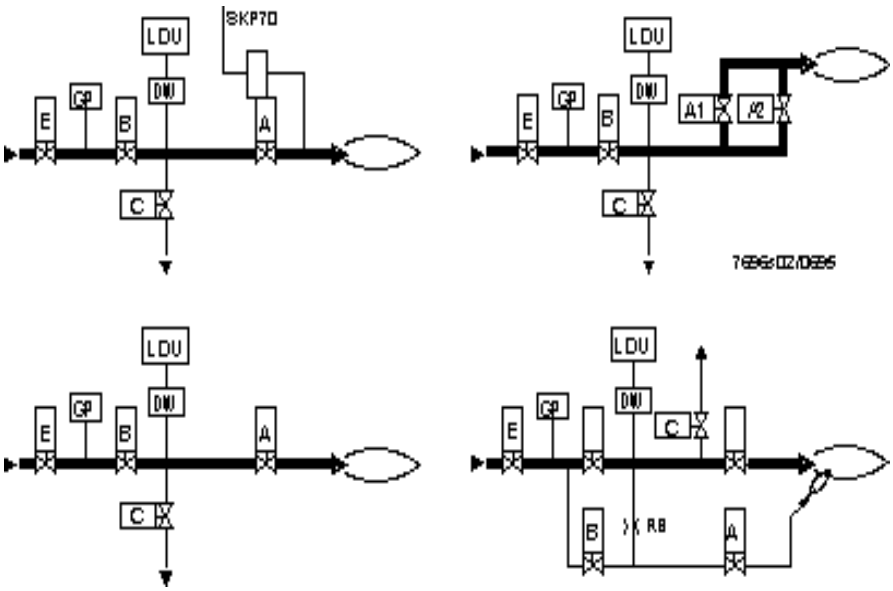

Connection examples with vent pipe to the atmosphere using burner control LFE, LFL, LGK or programming unit LEC...

Proving test **both during the pre-purge time (60 s min.) and immediately after the controlled shutdown** in plants **with a vent pipe to the atmosphere.** On delay of relay **d** > 2 s.

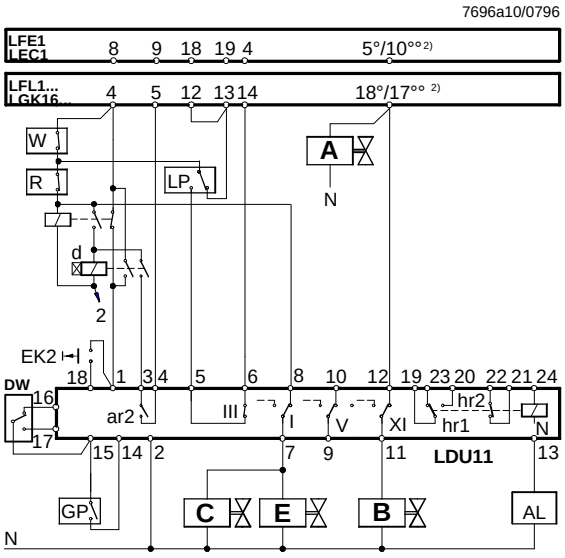

Proving test **following immediately the controlled shutdown**

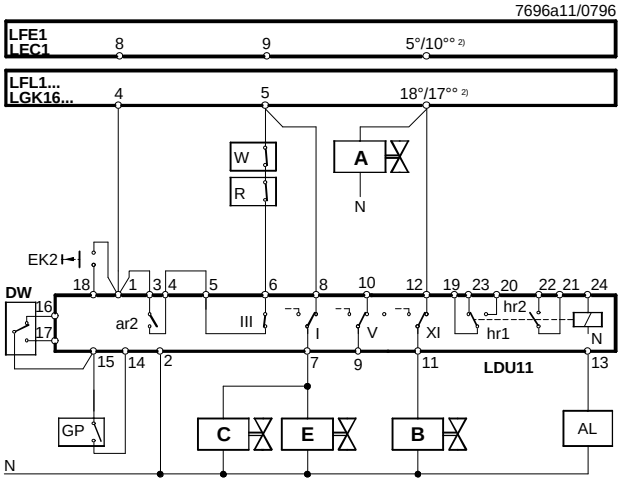

Connection example without vent pipe to the atmosphere (suitable for all countries) using burner control LFE, LFL, LGK or programming unit LEC...

Proving test **following immediately the controlled shutdown** in plants **without** vent pipe. Valve «A» or «A1» remains open after the controlled shutdown until the start of the first test phase is reached in order to evacuate the test space and to burn off the gas contained in it in the combustion chamber during the after-burn time.

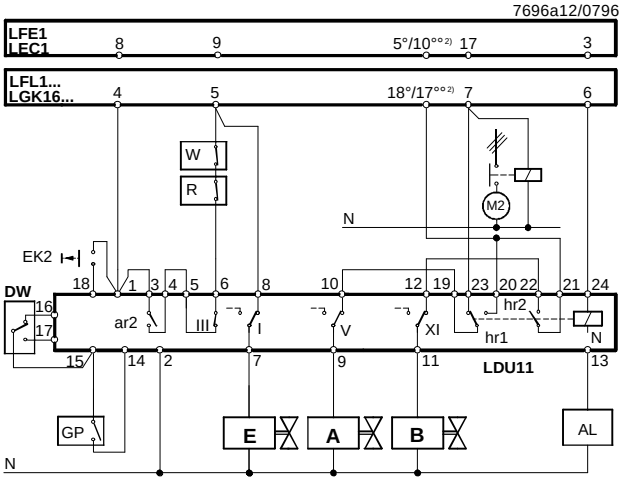

Valve proving with two pressure monitors

DWG Pressure monitor for the gas valve proving test with gas pressure. This pressure monitors must be set to the minimum gas pressure permitted during the proving test. If this pressure is not reached during the test, the control unit goes to lockout.

DWA Pressure monitor for the gas valve proving test with atmopheric pressure. This pressure monitor must be set to the maximum gas pressure permitted during the proving test with atmospheric pressure. If this pressure is exceeded during the test, the control unit goes to lockout.

DWG and DWA must be **overload-proof** up to the gas pressure level.

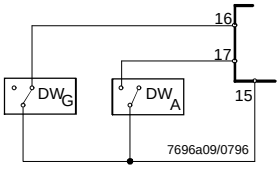

Installations **without** vent pipe to the atmosphere

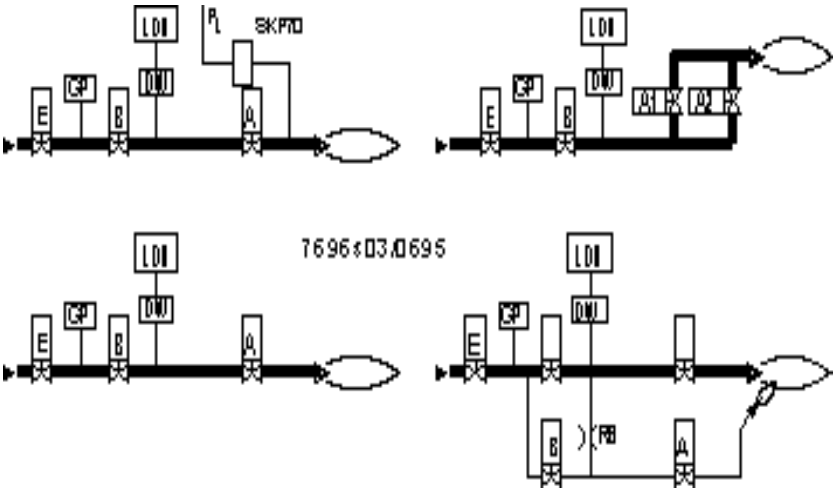

Connection examples without vent pipe to the atmosphere using burner control LFI7...
(cannot be used where DIN/DVGW and TRD412 regulations are in force)

For other connections, refer to wiring diagram of the burner control.

Proving test **prior to burner startup**

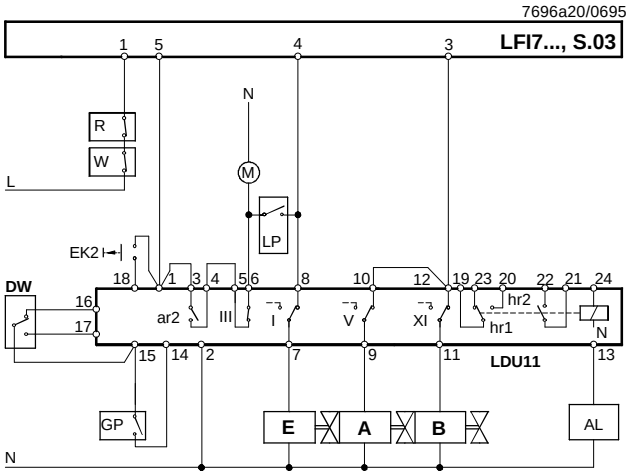

Proving test **following immediately the controlled shutdown**

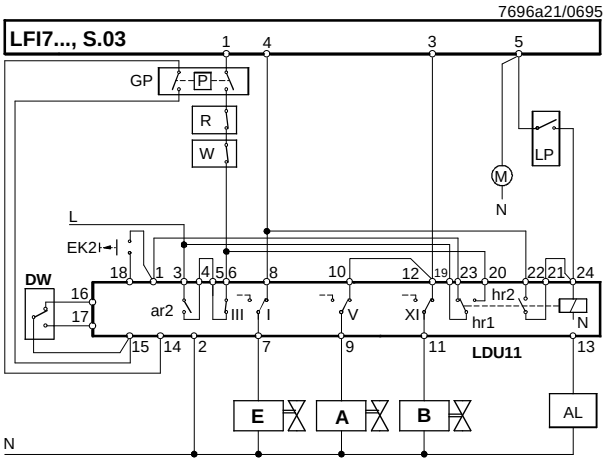

Connection examples without vent pipe to the atmosphere using burner control LFM1...

For other connections, refer to wiring diagram of the burner control.

Proving test **prior to burner startup**

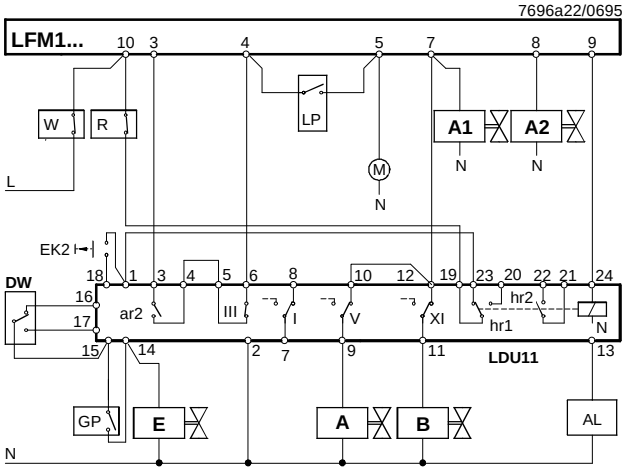

Proving test **following immediately the controlled shutdown**

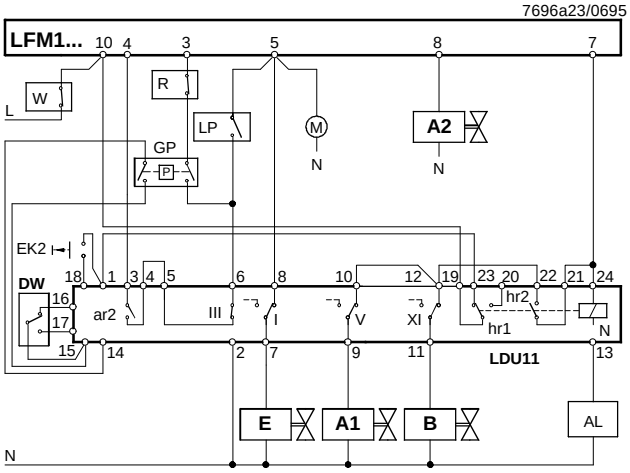

Connection examples without vent pipe to the atmosphere using burner control LGB2.../3.../4...

For other connections, refer to wiring diagram of the burner control.

Proving test **prior to burner startup**

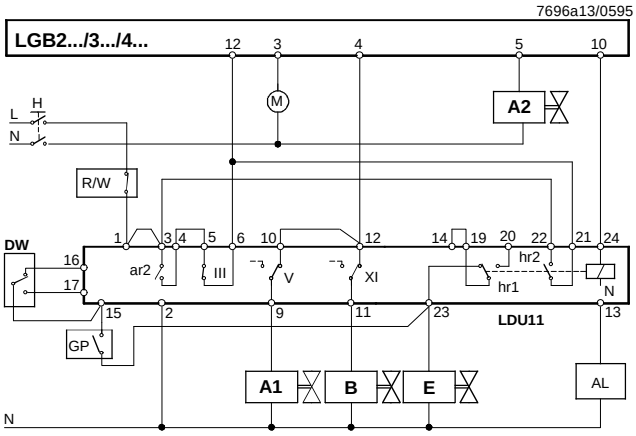

Proving test **following immediately the controlled shutdown**

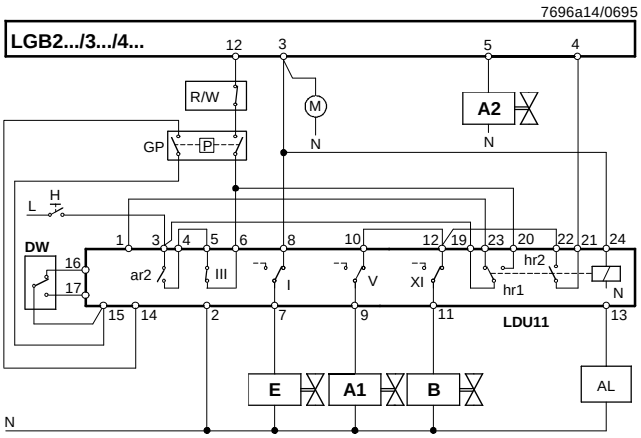

Installations **without** vent pipe to the atmosphere

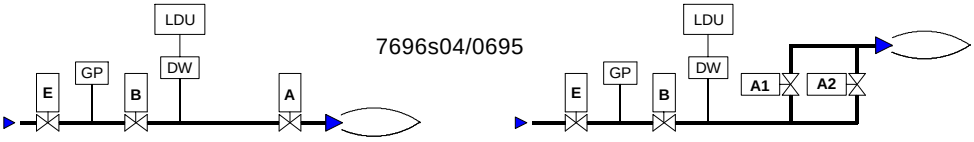

Connection examples without vent pipe to the atmosphere using burner control LFE..., LFL..., LGK... or programming unit LEC...

For other connections, refer to wiring diagram of the burner control.

Proving test **prior to burner startup**

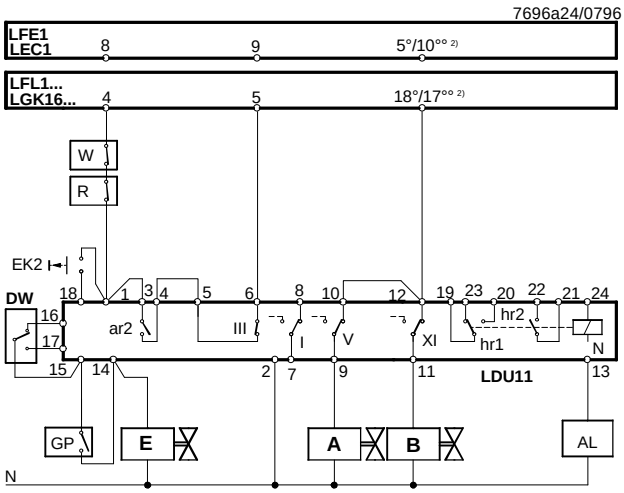

Proving test **during pre-purge time (60 s min.)**

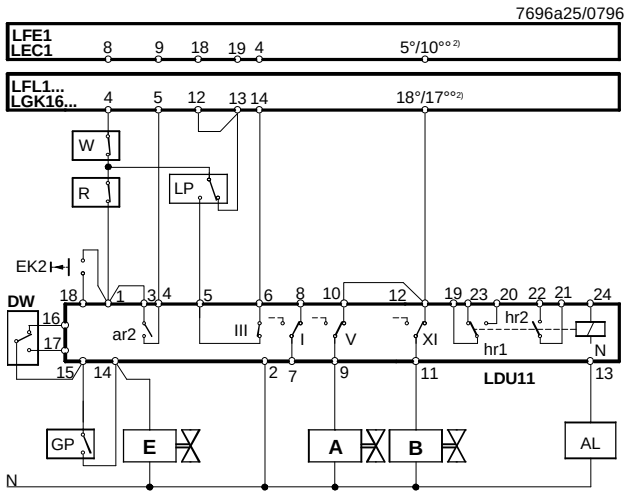

Valve proving with two pressure monitors

DWG Pressure monitor for the gas valve proving test with gas pressure. This pressure monitors must be set to the minimum gas pressure permitted during the proving test. If this pressure is not reached during the test, the control unit goes to lockout.

DWA Pressure monitor for the gas valve proving test with atmopheric pressure. This pressure monitor must be set to the maximum gas pressure permitted during the proving test with atmospheric pressure. If this pressure is exceeded during the test, the control unit goes to lockout.

DWG and DWA must be **overload-proof** up to the gas pressure level.

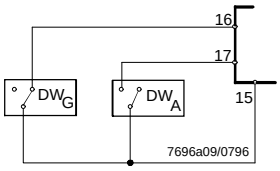

Installations **without** vent pipe to the atmosphere

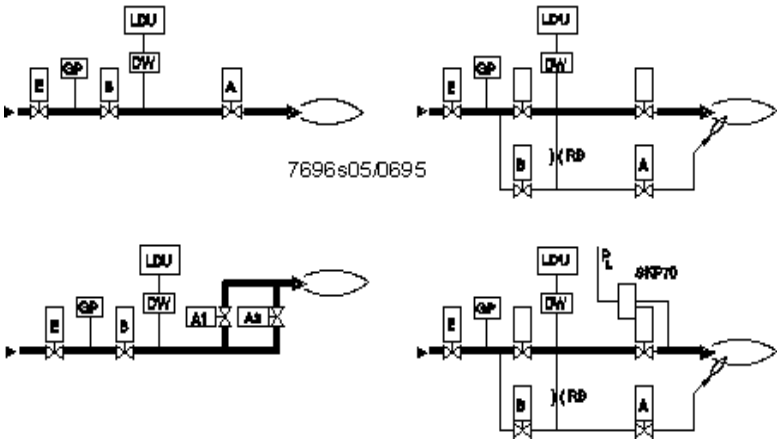

Connection examples without vent pipe to the atmosphere using burner control LFE..., LFL..., LGK... or programming unit LEC... and SKP70... with expanding flame burners

For other connections, refer to wiring diagram of the burner control.

Proving test **prior to burner startup**

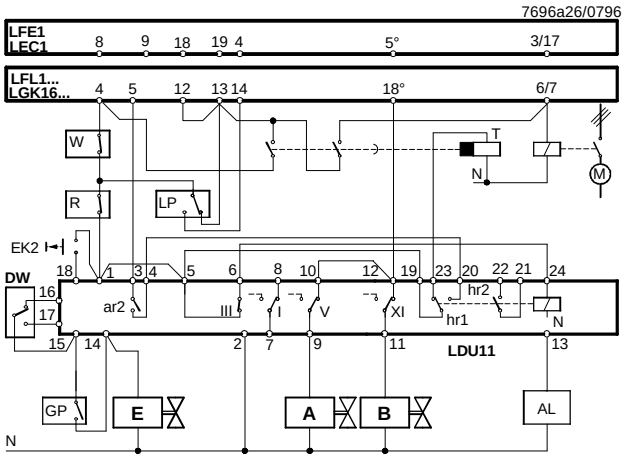

Proving test **during pre-purge time (60 s min.)**

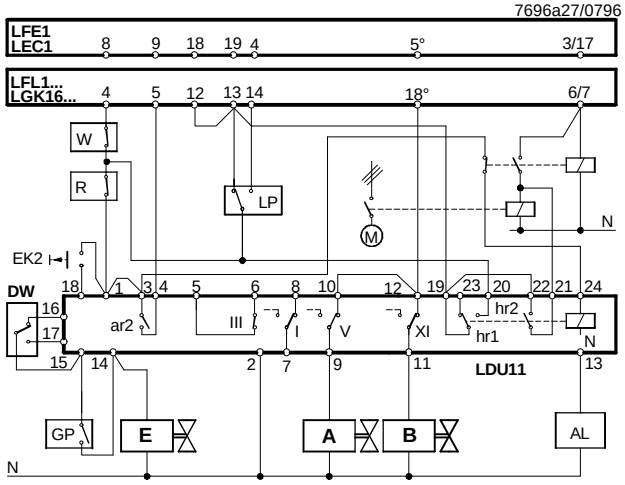

Valve proving with two pressure monitors

DWG Pressure monitor for the gas valve proving test with gas pressure. This pressure monitors must be set to the minimum gas pressure permitted during the proving test. If this pressure is not reached during the test, the control unit goes to lockout.

DWA Pressure monitor for the gas valve proving test with atmopheric pressure. This pressure monitor must be set to the maximum gas pressure permitted during the proving test with atmospheric pressure. If this pressure is exceeded during the test, the control unit goes to lockout.

DWG and DWA must be **overload-proof** up to the gas pressure level.

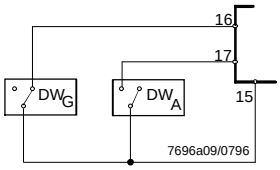

The air pressure for the SKP (PL) must be sufficiently high to open the SKP70, although the burner's air damper is closed. If this is not observed, the LDU11... control unit will go to lockout when performing Test1

Installations **without** vent pipe to the atmosphere

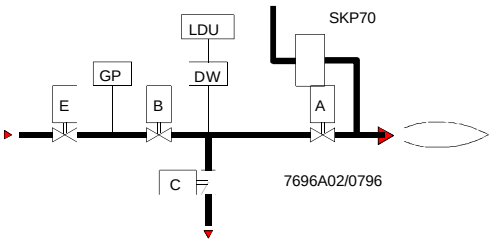

Dimensions

Dimensions in mm

LDU11... with base AGM11...

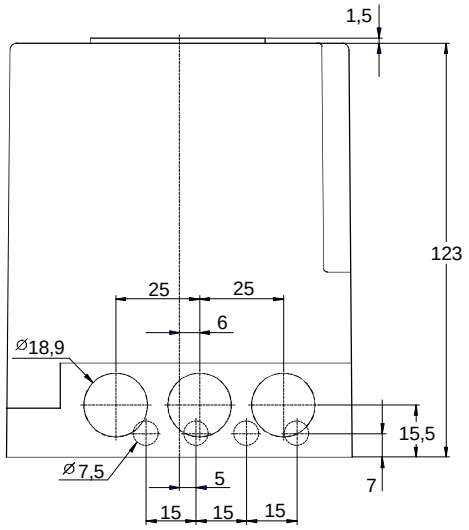

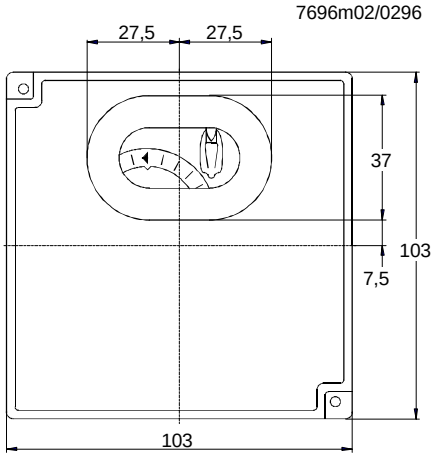

AGM11...